6 Antenna System Installation Preparations

About This Chapter

Before installing the antenna system, you must keep the necessary tools and instruments, and the feeder window ready.

Arranging Tools and Instruments

Table 6-1 lists the tools and instruments required for installing the antenna system. The common tools (such as a percussion drill or screwdriver) that are used for indoor equipment installation can also be used for antenna system installation.

Table 6-1 Tools and instruments for the antenna system installation

Measurement Tools	An angle display; a compass
Tools for Hoisting Devices	An assembly pulley; two ropes (1 thin and 1 thick, both 150 m long); feeder noose
Tools for Feeders	A feeder nipper; cable cutter (matching the feeder specification); blast lamp (to warm and soften the waterproof and sealing materials in cold environment); anti-rust aluminum paint
Tools for Safety	Safety belts (for personnel operating out of the tower platform); protecting caps; safety ropes; thick union suits; RF protective clothing; ESD wrist strap
Tools from the Local Customer	Double ladder; lifting tools for the main feeder wheel spindle
Other Tools	Canvas bag for tools; gloves; walkie-talkie; multi-purpose outlets; wrench; screwdriver; pliers; cable peeler
Test Instruments	Test mobile phone (optional); radio analyzer (such as CELLMASTER and power meter); VSWR tester (such as SITEMASTER)

Installing the Feeder Window

NOTE

If there is no need to install the feeder window, skip this section.

There are two types of feeder window:

- 12-hole feeder window
- 27-hole feeder window

Generally the 12-hole feeder window is used. **Figure 6-1** shows the dimensions of the 12-hole feeder window. **Figure 6-2** shows the structure of the 12-hole feeder window.

Figure 6-1 Dimensions of the 12-hole feeder window

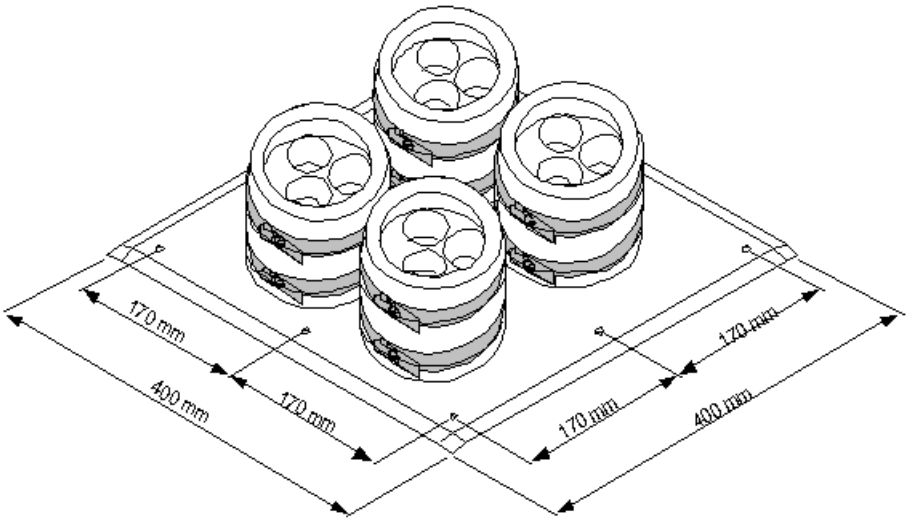

Figure 6-2 Structure of the 12-hole feeder window

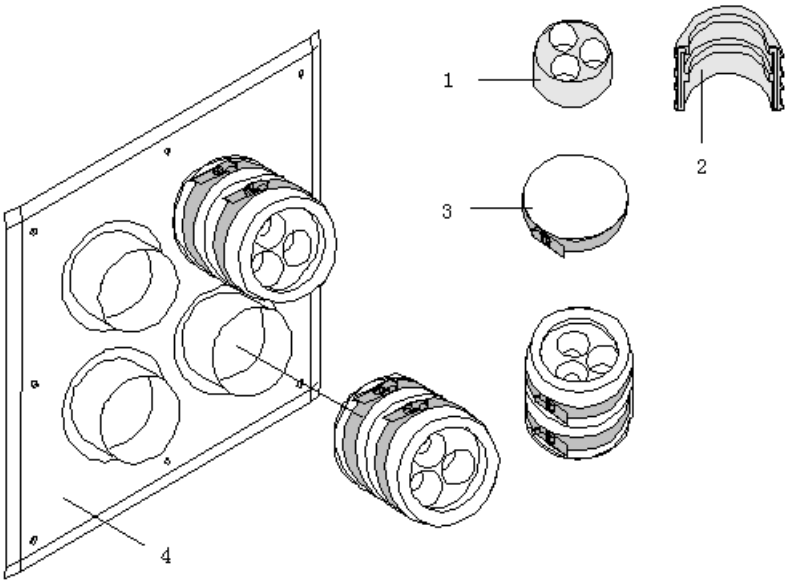

(1) Encapsulating gasket (2) Sealing sleeve

(3) Steel hoop (4) Window panel

Spacing Requirements for Antenna Installation

The installation of the antenna support and the antenna must satisfy the spacing requirements. Refer to the following for the spacing requirements:

- **6.1 Spacing Requirements for GSM Antenna Installation**

6.1 Spacing Requirements for GSM Antenna Installation

This part describes the spacing requirements for the installation of omnidirectional antennas and directional antennas in the GSM system.

6.1 Spacing Requirements for GSM Antenna Installation

This part describes the spacing requirements for the installation of omnidirectional antennas and directional antennas in the GSM system.

NOTE

The TX antenna can also receive signals. It works in duplex mode.

The spacing requirements are provided only for your reference. In field installation, perform the installation in compliance with the engineering design.

Spacing Requirements for Omnidirectional Antenna Installation

When the isolation of the omnidirectional antenna is 30 dB, the spacing requirements are described in **Table 6-2**.

Table 6-2 Spacing requirements for omnidirectional antenna installation

Antenna Type	Vertical Spacing	Horizontal Spacing	Remarks
GSM900:	⩾ 0.5m	⩾ 4 m for gain < 10 dBi	The spacing between the antenna and the tower body is 2 m.
TX-TX, TX-RX		⩾ 5 m for gain > 10 dBi	Generally, the RX antenna is installed above the TX antenna.
GSM1800:	⩾ 0.3m	⩾ 2 m for gain < 10 dBi	The spacing between the antenna and the tower body is 2 m.
TX-TX, TX-RX		⩾ 2.5 m for gain > 10 dBi	Generally, the RX antenna is installed above the TX antenna.
GSM900 +GSM1800:	⩾ 0.2m	⩾ 2 m for gain < 10 dBi	The spacing between the antenna and the tower body is 2 m.
TX-TX, TX-RX		⩾ 2 m for gain > 10 dBi	Generally, the RX antenna is installed above the TX antenna.
Requirements for diversity reception:			
GSM900: RX-RX	-	⩾ 4m (6m recommended)	The spacing between the antenna and the tower body is 2 m.
GSM1800: RX-RX	-	⩾ 2 m (3 m recommended)	The spacing between the antenna and the tower body is 2 m.

NOTE

- For the expansion in the future, the antenna installation should satisfy the spacing requirements described in **Table 6-2**.
- When the TX antenna and the RX antenna share an antenna support due to the limitation of the installation environment, the horizontal spacing requirements can be ignored. But the vertical spacing requirements described in **Table 6-2** must be satisfied. The TX antenna and the RX antenna cannot be installed in the same horizontal plane.
- The angle of the highest-radiation-intensity directions of antennas should be greater than the half of the vertical plane half-power angle of an antenna. The vertical plane half-power angle of an antenna normally is from 4º to 12º. Therefore, the angle of the highest-radiation-intensity directions of antennas should be greater than 7º. The higher the antenna gain is, the smaller the angle is.
- Normally, the longer the antenna is, the higher the antenna gain is, and the larger the antenna spacing should be.

Spacing Requirements for Directional Antenna Installation

When the isolation of the 120º directional antenna is 30 dB, the spacing requirements are described in **Table 6-3**.

Table 6-3 Spacing requirements for directional antenna installation

	Antenna Type	Vertical Spacing	Horizontal Spacing	Remarks
Antennas in the same sector	GSM900: TX-TX, TX-RX	⩾ 0.2m	⩾ 2m	No interference from the tower components should exist in the forward direction of the antenna.
	GSM1800: TX-TX, TX-RX	⩾ 0.2m	⩾ 1 m	No interference from the tower components should exist in the forward direction of the antenna.
Antennas in adjacent sectors on the same platform	GSM900: TX-TX, TX-RX	-	⩾ 1 m	The more the number of cells in a site is, the larger the horizontal spacing should be.
	GSM1800: TX-TX, TX-RX	-	⩾ 1 m	The more the number of cells in a site is, the larger the horizontal spacing should be.

	Antenna Type	Vertical Spacing	Horizontal Spacing	Remarks
Diversity reception antennas	GSM900: RX-RX	-	⩾ 4 m (6 m recommended)	No interference from the tower components should exist in the forward direction of the antenna.
	GSM1800: RX-RX	-	⩾ 2 m (3 m recommended)	No interference from the tower components should exist in the forward direction of the antenna.

NOTE

- For the expansion in the future, the antenna installation should satisfy the spacing requirements described in **Table 6-3**.
- Directional antennas should not be installed face to face. They should be arranged back to back or side by side.
- Normally, the longer the antenna is, the higher the antenna gain is, and the larger the antenna spacing should be.